DRAGON

VRU Compressor

Made in the USA!

SPECIFICATIONS:

- Compressor Type: LeROI Reciprocating, 3 Throw, true distance piece design with packing case incorporating a 3-Seal Design.
- Cylinders: twelve available cylinder sizes from 1.5" to 8.5" all non-lubricated design.
- Pressure Ratings:
  - Suction Pressure: vacuum to 800 PSIG
  - Discharge Pressure: to 1500 PSIG
- Configurations: single stage, two stage & three stage available.
- Driver: gas engine or electric motor available
- Compressor and Cooler Drive: belt drive design
- Gas Cooler: belt driven, fan cooled, forced draft with vertical coils and manual louvers. Optional thermostatic controlled louvers available.
- Controls: Enovation Controls VRU Pro or Well Pro Controller with auto start/stop features, auto unload and idle features, auto speed control features based on suction pressure.

email: production.equipment@modernusa.com

www.dragonproductsltd.com • 800-231-8198

U.S. owned and operated for over 50 years. © Copyright 2016 The Modern Group, LTD. All rights reserved.

VRU Compressor

- Scrubbers: each stage includes an inlet scrubber to remove condensates from inlet gas stream. scrubbers are equipped with level controls, dump valves and high level shut down. scrubbers are designed to ASME Section VIII, Division 1 Design requirements.
- Process Piping: process piping designed for =/< 2500 FPM gas velocity and designed to meet B31.3.
- Skid: all components are mounted on a structural steel skid designed for lift or tailboarding. skid is strategically filled with concrete to reduce any possibilities of reciprocating induced vibrations.
- Dimension: Length - 197.5” width - 72” height - 89.5”
- Weight: 15,000 LBS

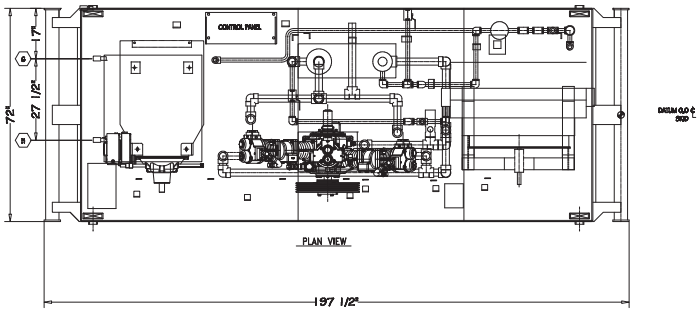

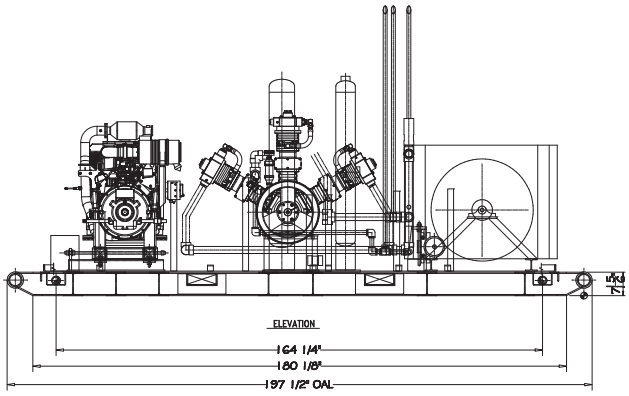

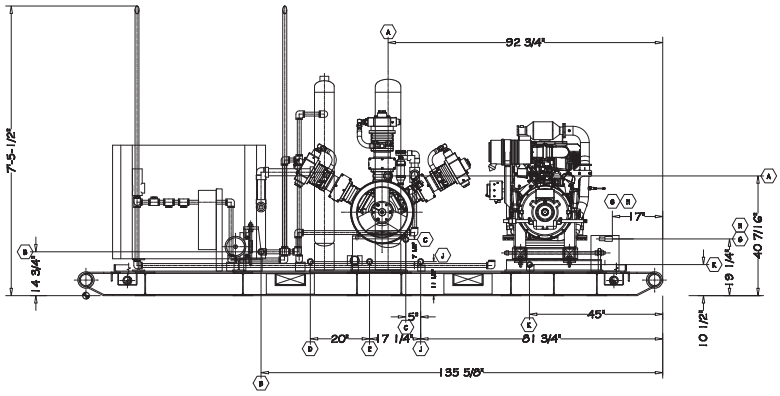

email: production.equipment@modernusa.com

www.dragonproductsltd.com • 800-231-8198
U.S. owned and operated for over 50 years. © Copyright 2016 The Modern Group, LTD. All rights reserved.